POS

PA-3350

High Performance with Highly Integrated 15" POS Terminal

Features and Benefits:

- High Performance Intel® Core™ i3-2120 3.3GHz
- 15" True Flat Touch Screen
- Bezel Free Front Panel
- All-in-One POS with integrated 2" or 3" Thermal Printer
- Optional MSR / i-Button / Fingerprint
- Optional VFD / 2nd Display
- Optional integrated Wireless LAN / RFID

POSReady

WEPOS Ready

PROTECH SYSTEMS
It's the right choice

Protech Systems Co., Ltd.
No. 24, Lane 365, Yang Goang Street, Nei Hu District Taipei 114, Taiwan
TEL: +886-2-8751-1111 FAX: +886-2-8751-1199
E-mail: sales@protech.com.tw
http://www.protech.com.tw

Protech Technologies Inc.
950 Fee Ana St, Suite B Placentia, CA 92870
TEL: +1-714- 996-7200 FAX: +1-714- 996-7300
Sales: sales@protech-usa.net
http://www.protech-usa.net

Protech Japan Co., Ltd.
OSK Bldg, 6F, 6-25-14, Minami-ohi Shinagawa-ku, Tokyo, 140-0013
TEL: +81-3-5753-8411 FAX: +81-3-3763-9282
E-mail: sam@protech-j.com
http://www.protech-j.com

Windows® Embedded Silver Partner

ISO CERTIFIED 9001 14001

PA-3350

High Performance with Highly Integrated 15" POS Terminal

Front View

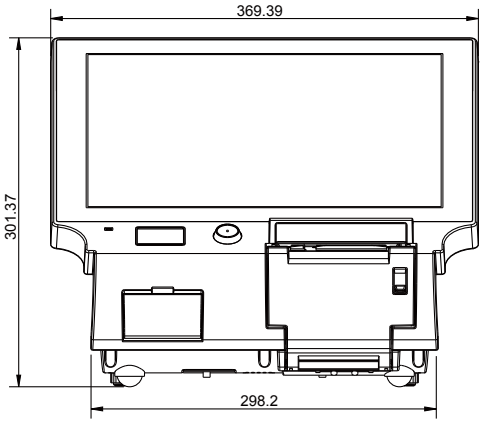

Side View

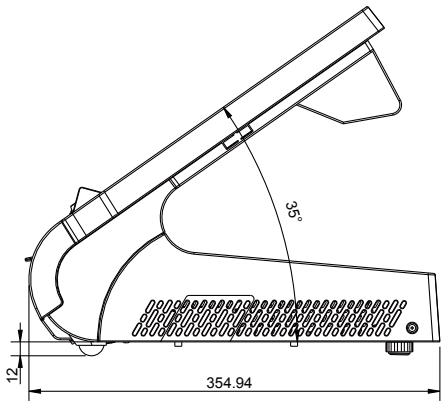

Unit: mm

Specification

System	
CPU Support	Intel® CPU series Core™ i3-2120 3.3 GHz, L2 Cache-3MB Pentium® G850 2.9GHz, L2 Cache-3MB Celeron® G540 2.4GHz, L2 Cache-2MB
Memory	1 x DDR3 SO-DIMM, Default 1GB (up to 4GB)
Core Logic	Intel® H61
Network	10/100/1000 Base-T Fast Ethernet
Power Supply	120~150 Watt Power Adaptor
System Weight	9 kg
Dimension (W x H x D)	369 x 298 x 354 mm
O.S. Support	POSReady 2009 / POSReady 7 / Windows XP / Windows 7

Storage	
SSD	1 x SATA SSD
HDD	1 x 2.5" SATA HDD

I/O Ports	
USB	4 x USB 2.0 ports / 1 x USB 2.0 on side bezel
Serial Ports	2 x DB-9 (COM 2/3), 1 x RJ45 (COM 1), +5/12V Selectable (COM 1~3)
PS/2	1 x PS/2 ports (default at keyboard)
LAN	1 x RJ-45
VGA	1 x DB-15 VGA interface
Audio	1 x 2W speaker
Cash Drawer	1 x RJ11 (+12V or +24V selectable)
Line out	1 x phone jack
Keyboard & Mouse	1 x PS/2 port
Printer	2" or 3" easy loading thermal printer with auto cutter
Option	1 x DB-25 Parallel Port, 1 x DB-9 Serial Port

Display	
LCD	15" TFT LCD
Max. Resolution	1024 x 768
Brightness	250 cd/m²
Touch Screen	5-wire Analog resistive
Viewing Angle	30 ~ 40 degree

Environment	
EMC & Safety	CE / FCC
Operating Temp.	0 ~ 35° C
Storage Temp.	-20 ~ 60° C
Humidity	20 ~ 90%

Ordering Information

PA-3350RB-A0B	15" SandyBridge All-in-One POS, 5W Flat Resistive Touch (black)
52-210-81100027	Intel Celeron G540 Processor,2.5GHz,2MB Cache
PA-3350RZ-22A	DDR3 2GB Memory /2.5" HDD
PA-3350RZ-30B	PA-3350 Front Bezel
PA-3350RZ-41B	ID-Tech MSR
52-002-08150101	150W power adaptor
PA-3350RZ-57B	Embedded module, 3" Printer, USB Interface
PA-3350RZ-61B	Embedded VFD module
PA-3350RZ-70B	Bottom cover

All of trademarks and brand names are the property of their owners. Trademark "Protech" is the property of Protech Systems Co., Ltd.
All information contained in this document is subject to change without any prior notice. This catalog is copyrighted in Dec. 2012.

PROTECH SYSTEMS
It's the right choice